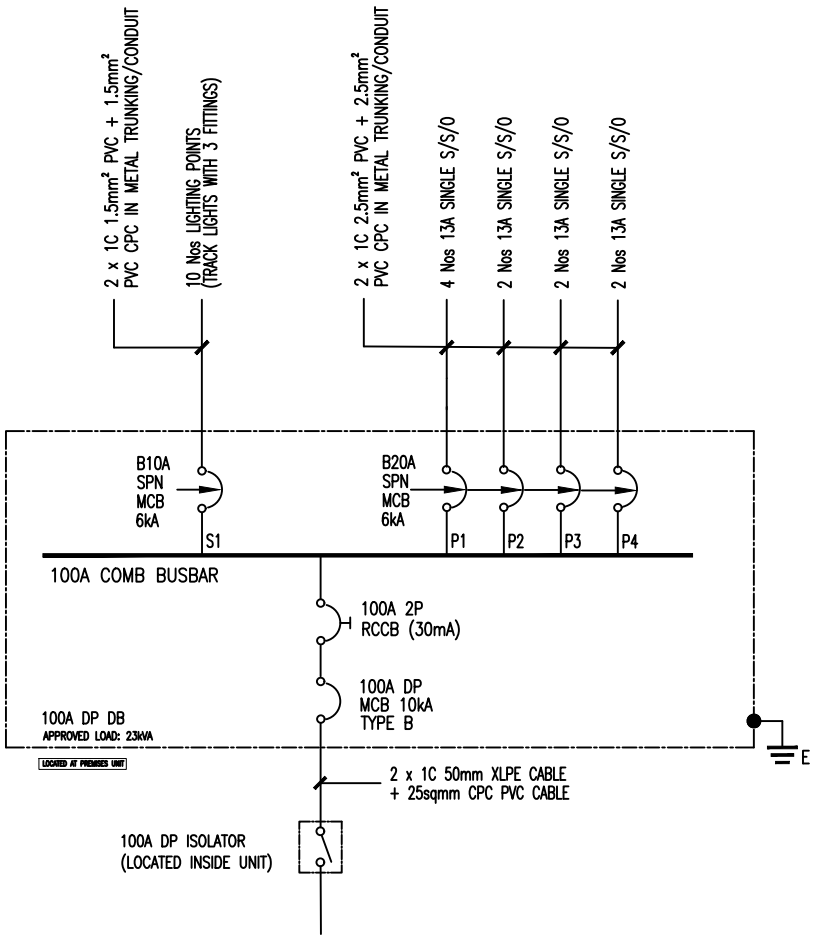

EMA LICENSED ELECTRICAL WORKER
ELECTRICAL
SEOW SWEE LEONG
8/25825
SINGAPORE

CLIENT / ADDRESS :	MAIN CONTRACTOR :	ELECTRICAL CONTRACTOR :	DRAWING TITLE :	LEW :	CHECKED :	DATE :
170 Upper Bukit Timah Rd B2-K01 Shoping Centre Singapore 588179	Summer Acai (Bukit Timah) Pte. Ltd. Northpoint Bizhub 2 Yishun Industrial Street 1 #06-31 Singapore 768159		SINGLE LINE DIAGRAM (SLD)	SEOW SWEE LEONG EMA Licence No. : 8/25825		13 OCT 2025
					DRAWING NO. :	REV : 0